Double Girder - Medium, 8 PART DOUBLE

Hoist type:

DHR10 16/2..EZ

US-60Hz

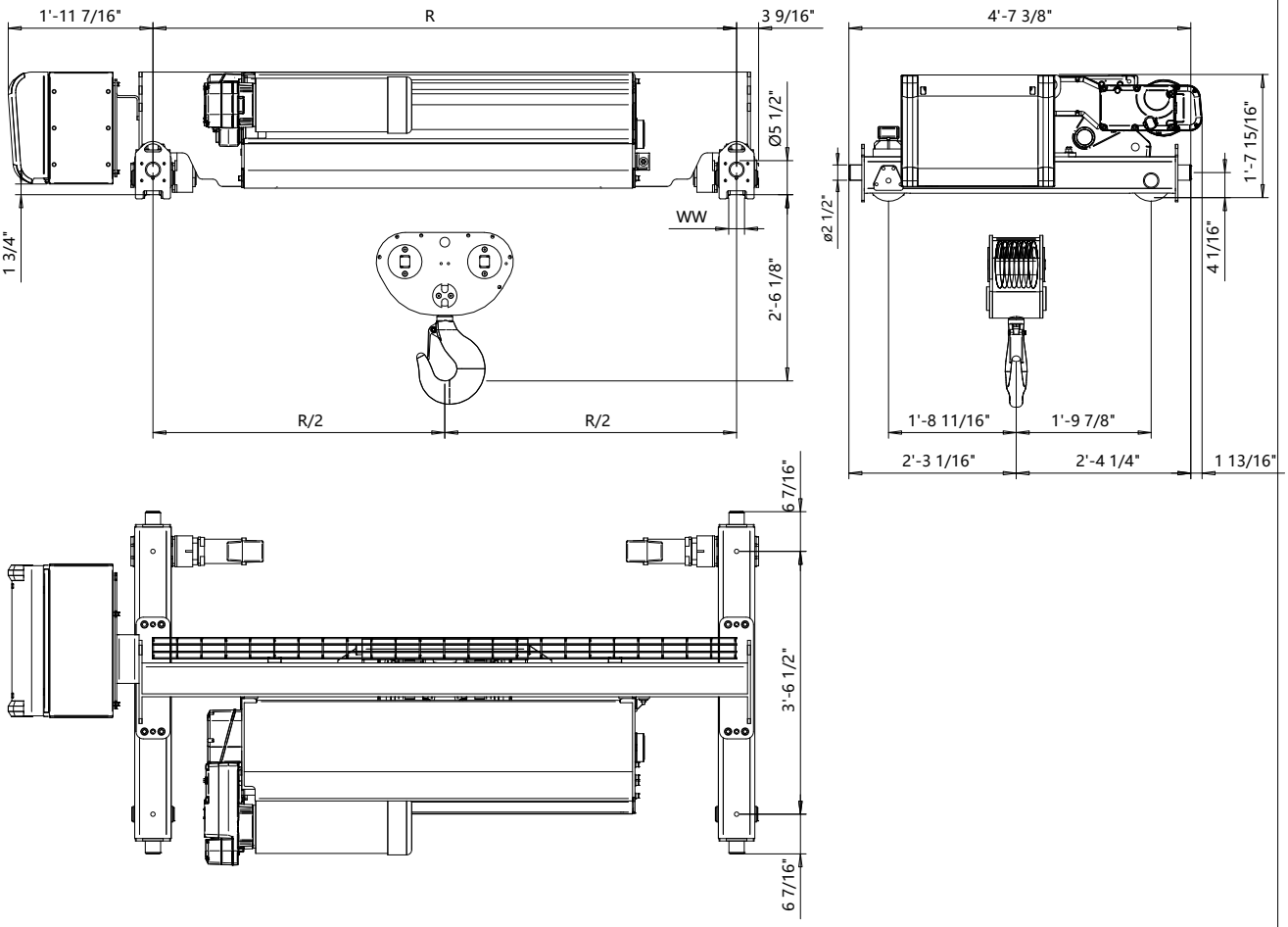

Headroom C-Dimension			Notes
Case 1	Case 2	Case 3	Case 1: Steel rope without HS22 limit switch
(inch)	(inch)	(inch)	Case 2: Steel rope with HS22 limit switch
30 1/8"	30 1/8"	30 1/8"	Case 3: Steel rope with HS22 L.S. & Rope angle sensor

						Estimated Weight *	
HOL	Length	WW min	WW max	R min	R max	R min	R max
(ft-in)	code					(lb)	(lb)
23'-0"	G	2 1/16"	3 1/4"	7'-10 1/2"	10'-2 1/16"	2360	2540
26'-3"	H	2 1/16"	3 1/4"	7'-10 1/2"	10'-2 1/16"	2480	2660
31'-2"	J	2 1/16"	3 1/4"	8'-10 5/16"	10'-2 1/16"	2650	2780
38'-4'	K	2 1/16"	3 1/4"	10'-2 1/16"	10'-2 1/16"	2940	2940

Load	Class
(ton)	ASME
15	H4
20	H3

* Estimated weight with P5 hoist motor

Standard rail gauges are 7'-10 1/2", 8'-10 5/16", 10'-2 1/16".

Default trolley gauge is R min.

Rev	Explanation	Date	Revised by	Checked by

This document is the absolute property of Demag Crane & Components Corp. This document must not be copied without the written permission of Demag Crane & Components Corp.
The contents thereof must not be disclosed to a third party nor be used for any unauthorized purpose. Contravention will be prosecuted.

Design	Chd	Appd	Ref Drawing	R10-M-28
Date	DOUBLE GIRDER HOIST			1:10
SLEQMECE Owner Dept	8 PART DOUBLE			Folder
DEMAG	R10082_M			Issue 2

R10-M-28_1 2025-06-05 R10-M-28