This document is the absolute property of Demag Crane & Components Corp. This document must not be copied without the written permission of Demag Crane & Components Corp.
The contents thereof must not be disclosed to a third party nor be used for any unauthorized purpose. Contravention will be prosecuted.

# DFO20 END TRUCK SIDE JOINT PLATE TYPE R

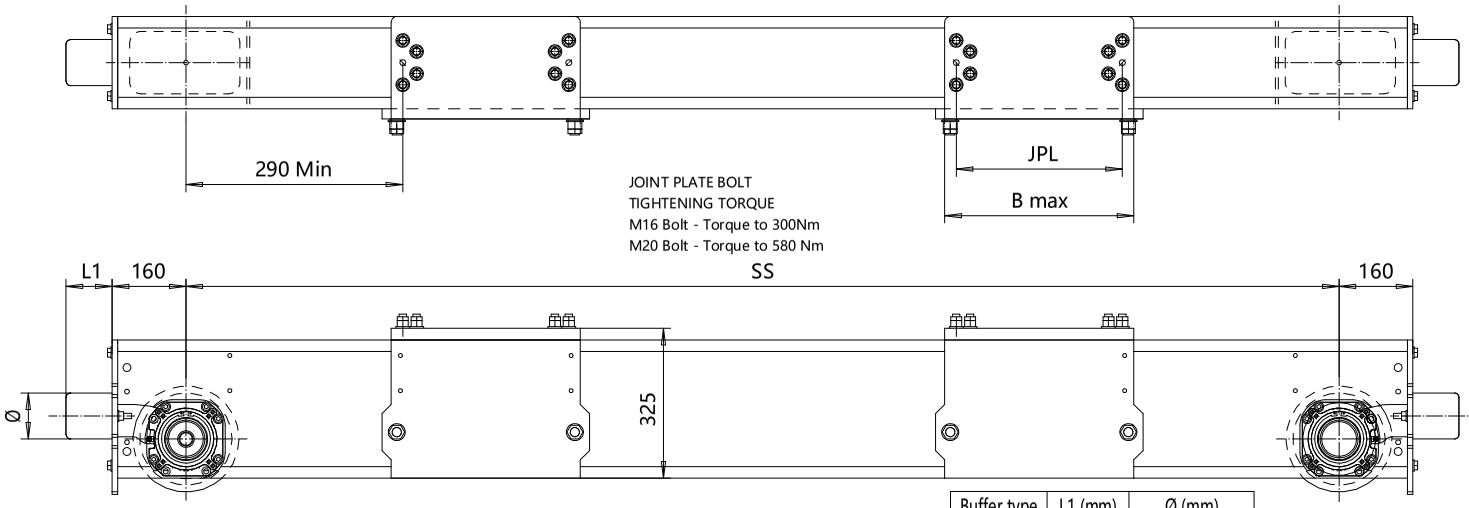


JOINT PLATE BOLT
TIGHTENING TORQUE
M16 Bolt - Torque to 300Nm
M20 Bolt - Torque to 580 Nm

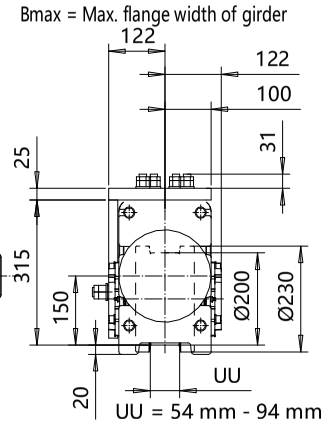


| Buffer type | L1 (mm) | Ø (mm) |
|---|---|---|
| A | 53 | 63 |
| B | 68 | 80 |
| C | 85 | 100 |
| D | 105 | 125 |
| K | 80 | 80 |
| G | 100 | 100 |
| E | 150 | 100 |
| F | 190 | 125 |
| H | 160 | 160 |
| I | 200 | 200 |
| M | 125 | 125 |
| P | 240 | 160 |
| S | 300 | 200 |
| B, C, D rubber | | |
| K, G, E, F, H, I, M, P, S polyurethane | | |

Product Code example

DFO20-2574-R40840C0000-N

- N=standard, E=Special
- -primer paint, color code
- (not in use with RTN20)
- Buffer type
- Joint plate distance (pin to pin, with double DG girder) (driving wheel to pin with asymmetrical single SG girder)
- Joint plate code
- - =1WD, D =2WD (Number of driving wheels/end carriage)
- Wheel groove =UU
- Wheel base =SS
- - =std, C=asymmetrical joint
- Type of end carriage

The wheel loads listed are only a guideline. The max. wheel load listed is based on the structural integrity of the frame and load placement, and it does not take into account permissible wheel loading or bearing life. SG load placement is at the center, and DG load placement is for a trolley gage of 1400 mm [55 1/8"].
The permissible dynamic wheel load listed is based on assumptions that the bridge speed is 40 m/min [130 fpm], end truck duty is Fem 2m, and the runway rail as listed.
The actual wheel load should not exceed the permissible wheel load. If the permissible dynamic wheel load is greater than the maximum dyn wheel load, then the actual wheel load cannot exceed maximum dyn wheel load.
Dyn wheel load = 1.15 x static wheel load

| Joint plate | Min. Wheelbase, mm Trolley gage = 1200mm | JPL (mm) | B max (mm) |
|---|---|---|---|
| R3 | 2500; DG | 250 | 300 |
| R4 | 2500; DG | 360 | 410 |
| R5 | 2500; DG | 470 | 520 |
| R6 | 2500; DG | 580 | 630 |

| Wheelbase code | SS (mm) | Max dyn whl load, (kN) SG | Max dyn whl load, (kN) DG | Perm dyn whl load, (kN) ASCE 60# | Perm dyn whl load, (kN) ASCE 85# | Approx Wgt / trk (kg) SG | Approx Wgt / trk (kg) DG |
|---|---|---|---|---|---|---|---|
| 16 | 1600 | 132 | 132 | 88 | 98 | 252 | 295 |
| 20 | 2000 | 132 | 132 | 88 | 98 | 281 | 324 |
| 25 | 2500 | 132 | 132 | 88 | 98 | 318 | 361 |
| 32 | 3150 | 112 | 132 | 88 | 98 | 365 | 408 |
| 40 | 4000 | 75 | 85 | 88 | 98 | 427 | 470 |
| 45 | 4500 | 53 | 59 | 88 | 98 | 463 | 506 |

| Pos | Description | Specification | Id | Drawing |
|---|---|---|---|---|
| ETTVPH Design | | ETTVPH Chd | Appd | |
| 2008-05-23 Date | END TRUCK OUTLINE DRAWING | | | 1:10 |
| Dept | DFO20-R | | | Folder ECN20 |
| DEMAG | DFO20 END TRUCK SIDE JOINT | | | Issue 08/2025 |